Data sheet: EKM 2020 Pole fuse box with SPD T2 + T3 for cable 5x16

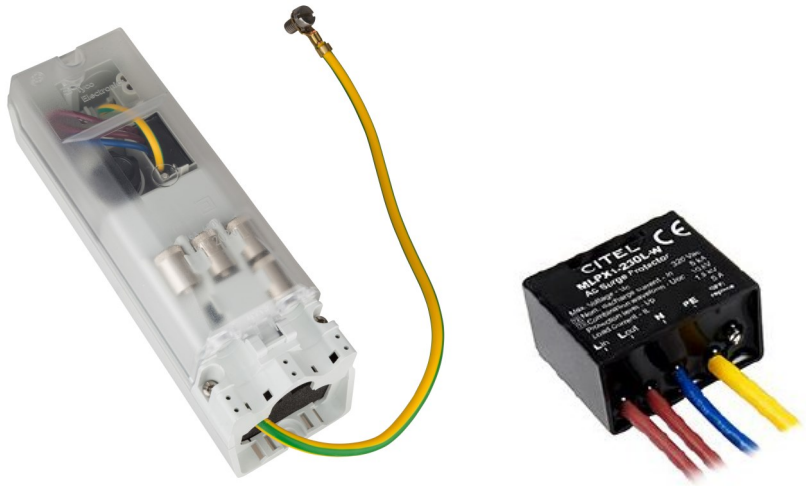

SCHRACK-INFO

- Mast terminal box with integrated surge arrester T2 and fine protection T3
- 1 integrated fuse base D01 - E14
- Two luminaire connection cables can optionally be mounted downwards parallel to the access cable

Technical data

Technical data of the connection box	
Standard according to	DIN 43628
Protection class	II
IP rating	IP44
Minimum diameter	From 84mm
Door size	From 70 x 240mm
Dimentions l x w x h	232 x 69 x 69,5mm
Cover design	Transparent cover with snap lock
Fuse socket	1 fuse base, 16A / D01 - E14
Screw cap	1 screw cap, D01 - E14
Mantle terminals	5 Mantle terminals
Rail conection	Brass rails, nicle-plated
PE and N—out terminals	Fully insulated screw terminal
Grid configurations	N, L1, L3, L2, PE(N), for all grid configurations

Seybelgasse 13, A - 1230 Wien, **TELEFON** +43 1/866 85-0
E-MAIL info@schrack.com, **INTERNET** www.schrack.at

Protective conductor	Premounted earthing cable, 10mm², green/yellow, 400mm long, with captive screw M 8 x 12
Cable entry	Cable clamp for 1 cable to 3 cables 5 x 2,5 - 16mm²
Output	2 cable insertion grommet enclosed, 2 x 5 x 2,5mm²
Technical data of surge protection / fine protection	
Type	Combined arrester T2 + T3 (B+C)
U_N	230 - 277V
U_c	320V
U_p	1.500V
I_{max} (1x8/20s)	10kA
I_{total} (8/20s)	20kA
I_n (15x8/20s)	5kA
U_{OC}	10kV/5kA
I_L	5A
I_{SCCR}	1kA

Circuit diagram

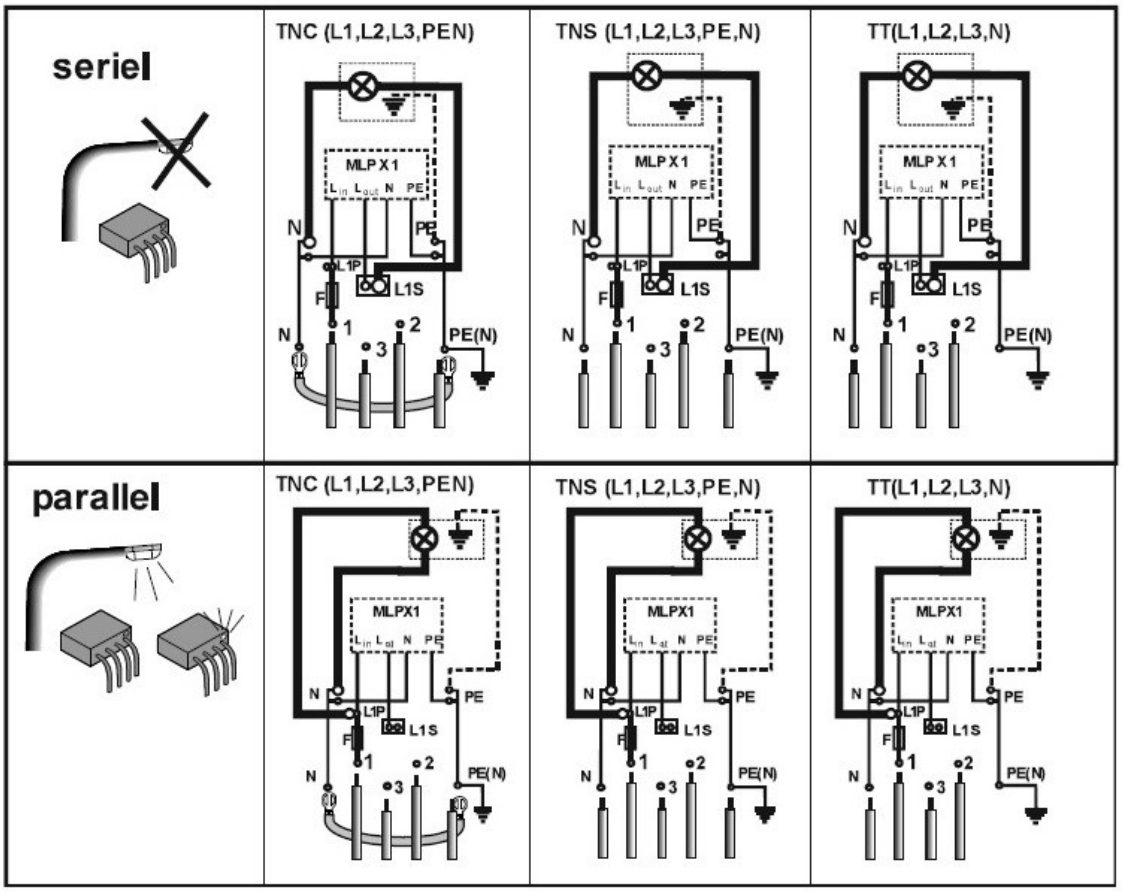

Schematic

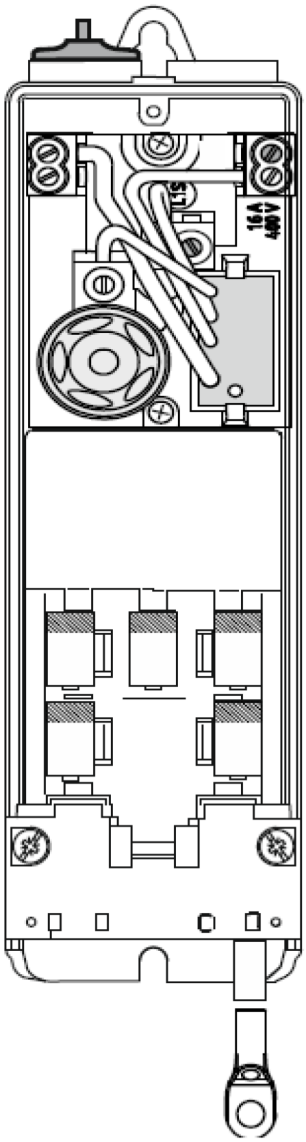

cable entry

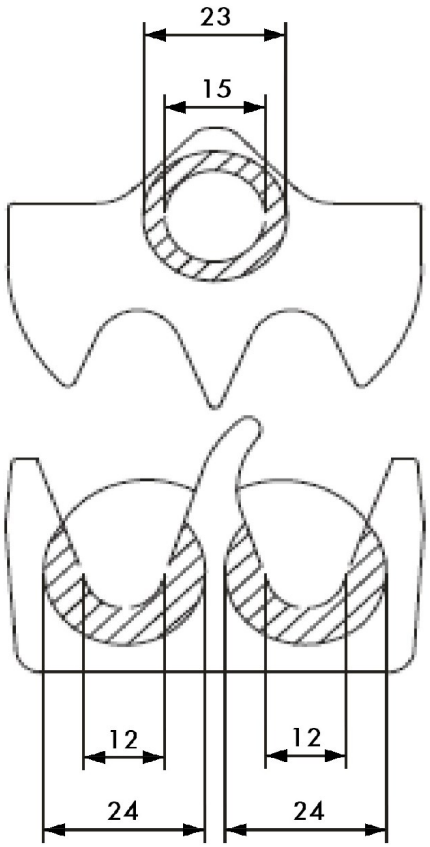

Dimensions

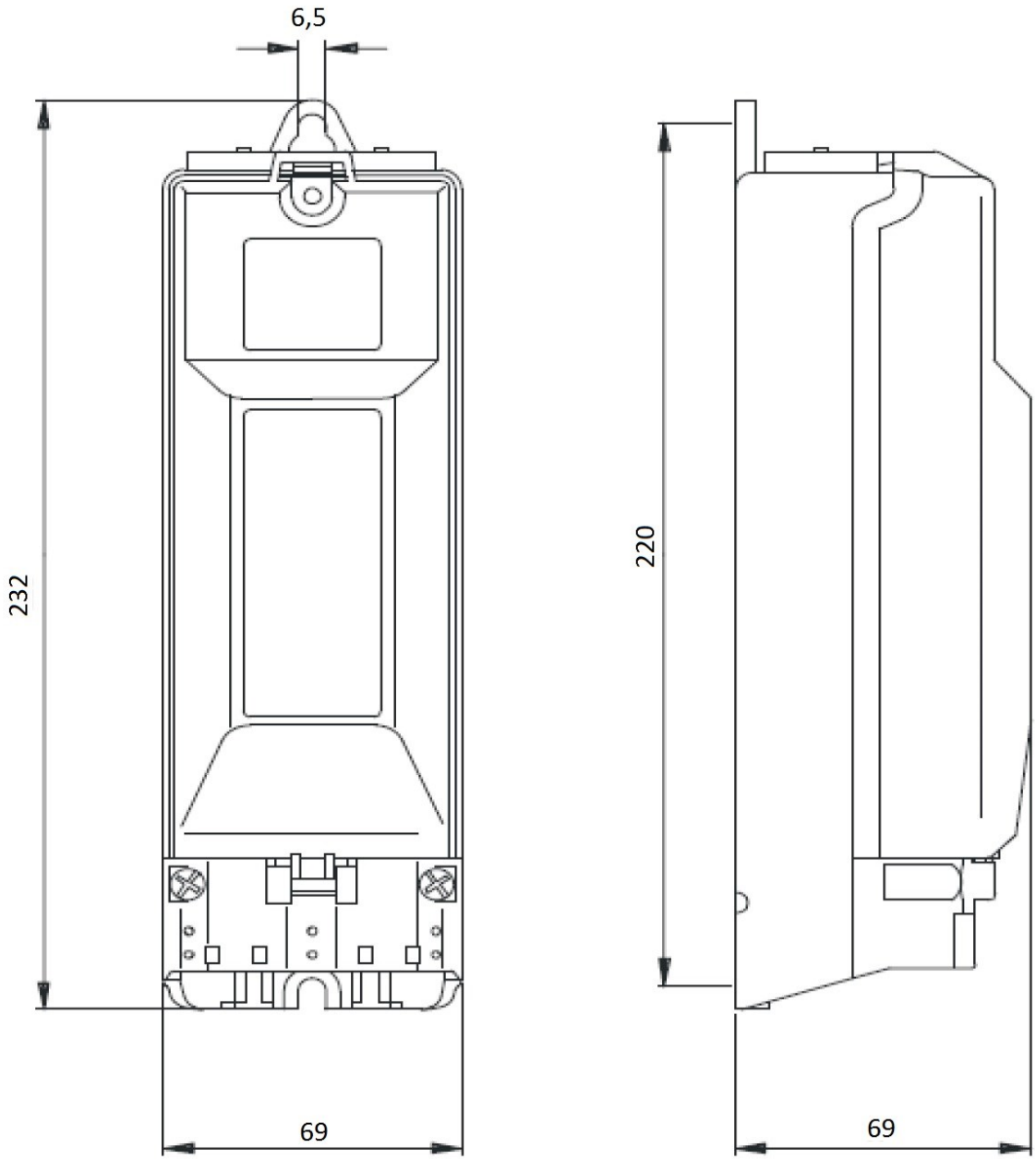

Article number

DESCRIPTION	ORDER NUMBER
EKM 2020 Pole fuse box with SPD T2 + T3 for cable 5x16	LIJOR94651